Inverse Problems in Engineering: Theory and Practice
3rd Int. Conference on Inverse Problems in Engineering
June 13-18, 1999, Port Ludlow, WA, USA

EXP01

COMPARISON OF TWO KINDS OF EXPERIMENTS FOR ESTIMATION OF THERMAL PROPERTIES OF ABLATIVE COMPOSITE

Ljubica P. Kanevce
"St. Kliment Ohridski" University
Faculty of Technical Sciences
Ivo Lola Ribar bb, Bitola, 97 000, Macedonia
Phone, Fax: + 389 96 263 256
e-mail: kanevce@soros.org.mk

Gligor H. Kanevce
"St. Kliment Ohridski" University
Faculty of Technical Sciences
Ivo Lola Ribar bb, Bitola, 97 000, Macedonia
Phone, Fax: + 389 96 263 256
e-mail: kanevce@soros.org.mk

Zore Z. Angelevski
"St. Kliment Ohridski" University
Faculty of Technical Sciences
Ivo Lola Ribar bb, Bitola, 97 000, Macedonia
Phone: + 389 97 32 210

KEY WORDS: composite materials, ablation, estimation, thermal properties.

ABSTRACT

The aim of this work is to give more information on the influence of the experimental conditions to the estimated thermal properties of ablative composite materials. Two kinds of experiments with the carbon phenolic composite samples have been carried out. In the first, the sample has been exposed to intensive thermal load from acetylene flame, and in the second, the sample has been incorporated in the rocket nozzle. The obtained transient temperature responses are used to estimate unknown thermal properties

Transient one-dimensional partial differential equations with two moving boundaries and decomposition equations have been used to describe complex process of heat and mass transport within material and at its surface. The set of equations has been solved numerically. Newton-Raphson's and steepest descent methods have been combined to minimize the difference between the model prediction and experimental response.

INTRODUCTION

Technology today creates many new kinds of composites used in many different applications. In this study ablative phenolic composite designed for thermal protection is analyzed.

Property evaluation of ablative composites by method of nonlinear estimation is dependent of design and realization of experiments and of mathematical description of the phenomena in the material. Especially, it is in the case of composites under high heating loads, where complex heat and mass transfer processes are involved. The main objective of this study is to examine the influence of the experimental conditions to the estimation of thermal properties of ablative composite materials. In order to achieve this, two different experiments are analyzed and compared. The mathematical model of transient processes of heat and mass transfer in composite and characteristics of nonlinear optimization model are presented. Predicted and experimental transient temperature responses are given. The estimated parameters from the two experiments are presented and compared.

NOMENCLATURE

A = sensitivity coefficient matrix
B_p = Arhenius constant, 1/s
c = specific heat, J/kgK
E = activation energy, J/kg
E = sum of squared differences, K^2
H_c = specific ablation heat, J/kg

H_p = enthalpy of the gases from pyrolysis, J/kg
I = unitary matrix
k = reaction rate, 1/s
M = experimental temperature vector, K
m_c = specific ablation mass flow rate, kg/m^{2}s
m_p = specific pyrolysis mass flow rate, kg/m^{2}s
P = parameter values vector
s = zone boundary
T = calculated temperature vector, K
v_a = ablation velocity, m/s
v_p = pyrolysis velocity, m/s
x = space coordinate, m
α = heat transfer coefficient, W/m^{2}K
δ = thickness, m
ΔH_p = specific pyrolysis heat J/kg
ε = fraction of resin transformed to the gas
λ = thermal conductivity, W/mK
ρ = density, kg/m^3
τ = time, s
ψ, ξ = transformed coordinates

MATHEMATICAL MODEL OF ABLATING COMPOSITE

Under the experimental conditions, in composite complex processes of heat and mass transfer take place.

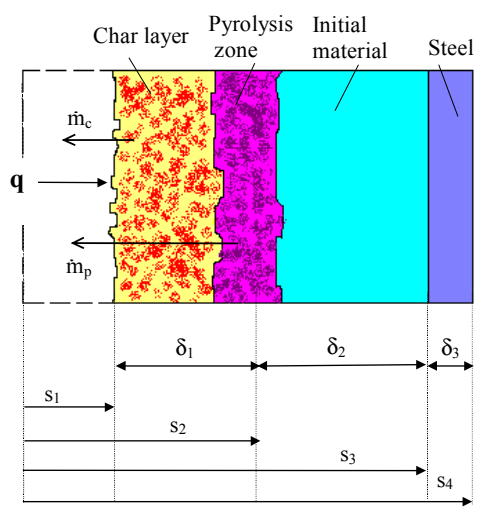

Figure 1. The zones within the ablating composite

When the composite is exposed to high-temperature and high-velocity fluid stream, decomposition of resin and formation of char layer begins at a critical temperature and, char layer ablation at an another, higher temperature. The free surface of the composite, under the influence of high temperature stream is continuously spalled, and, depending on the oxygen content in the gases, oxidized. After that, the two processes take place simultaneously, so, three zones are formed (Fig. 1.): the virgin material, the pyrolysis zone and the porous char layer.

The mathematical model of in-depth ablation has been developed on the basis of described processes (Kanevce, 1992). The model is one-dimensional, with three layers: the char layer, virgin material, and steel. The pyrolysis takes place at the surface between them. A layer of steel exists behind the zone of the virgin material. The material thermal properties in the zones are assumed constant. Hence, the problem can be described by the following transient partial differential heat conduction equations:

$$\lambda_1 \frac{\partial^2 T}{\partial x^2} + m_p c_g \frac{\partial T}{\partial x} = \rho_1 c_1 \frac{\partial T}{\partial \tau}, \qquad s_1 < x < s_2, \qquad (1)$$

$$\lambda_2 \frac{\partial^2 T}{\partial x^2} = \rho_2 c_2 \frac{\partial T}{\partial \tau}, \qquad s_2 < x < s_3, \qquad (2)$$

$$\lambda_3 \frac{\partial^2 T}{\partial x^2} = \rho_3 c_3 \frac{\partial T}{\partial \tau}, \qquad s_3 < x < s_4, \qquad (3)$$

where, T is temperature, λ denotes thermal conductivity, ρ is density, and c is specific heat. Indexes 1, 2 and 3 refer to the zones of char, virgin material and steel substructure respectively, and index g to gases.

Thermal equilibrium between gases produced in the pyrolysis zone with a mass flow rate m_p and the char material is assumed in the Eq. (1).

The boundary conditions are:

$$\alpha_g (T_{g,eff} - T_a) = -\lambda_1 \frac{\partial T}{\partial x} + m_p H_p + m_c H_c, \qquad x = s_1(\tau), \quad (4)$$

$$-\lambda_1 \frac{\partial T}{\partial x} = -\lambda_2 \frac{\partial T}{\partial x} + m_p \Delta H_p, \qquad x = s_2(\tau), \quad (5)$$

$$-\lambda_2 \frac{\partial T}{\partial x} = -\lambda_3 \frac{\partial T}{\partial x} \qquad x = s_3, \qquad (6)$$

$$\frac{\partial T}{\partial x} = 0 \qquad x = s_4, \qquad (7)$$

where, α_g is the heat transfer coefficient, T_a ablation temperature, $T_{g,eff}$ effective gas temperature obtained from the recovery enthalpy.

The term $m_c H_c$ represents the total heat of ablation, where the specific heat of decomposition of the ablation surface char layer is H_c, and the mass flow rate is m_c.

The mass flow of the pyrolysis gases away from the surface blocks the flux from the boundary layer toward the surface by the effect $m_p H_p$ included in the Eq. (4), where H_p is the enthalpy of gaseous products.

The specific heat of decomposition of the phenolic resin is ΔH_p. The term $m_p \Delta H_p$ in the second boundary condition (Eq. (5)) represents the heat of decomposition in the pyrolysis zone.

As the ablating surface is at high temperature, significant error may arise (up to 25%) if the radiative heat exchange with surrounding solid surfaces at temperature T_0 is ignored. Therefore, in the boundary condition on the thermally loaded surface, the heat transfer coefficient is replaced with its effective value $\alpha_{g,eff}$:

$$\alpha_{g,eff} = \alpha_g - \frac{c_c \varepsilon_{gr} \left[(\frac{T_a}{100})^4 - (\frac{T_0}{100})^4 \right]}{T_{g,eff} - T_a} \tag{8}$$

where: c_c is radiation constant of black body and ε_{gr} is emissivity of the ablating surface.

The initial conditions are:

$$T(x,0) = T_0, \tag{9}$$

$$m_c = 0, \qquad T(0,\tau) < T_{a0}, \tag{10}$$

where, T_{a0} is the temperature of ablation beginning.

The ablation model involves three zones and two moving boundaries, s_1 and, s_2. Third and fourth boundary, s_3, and, s_4 are fixed. Corresponding equations for defining boundaries are:

$$s_1(\tau) = \int_0^{\tau} \frac{m_c}{\rho_1} dt \tag{11}$$

$$s_2(\tau) = \int_0^{\tau} \frac{m_p}{\rho_2 - \rho_1} dt \tag{12}$$

$$s_3(\tau) = const. \tag{13}$$

$$s_4(\tau) = const. \tag{14}$$

To complete the system of equations of the in-depth ablation model, it is necessary to include equations for calculating the pyrolysis mass flow rate. The motion of the pyrolysis zone is defined by kinetics of the phenolic resin decomposition. It is assumed that the rate of decomposition may be expressed by the first degree reaction:

$$-\frac{\partial[\rho_2(\beta\chi_g - \varepsilon)]}{\partial\tau} = k\rho_2(\beta\chi_g - \varepsilon) \tag{15}$$

where: β denotes fraction of phenolic resin in the composite, χ_g is the mass-fraction of the resin which may be decomposed at temperature T in respect to total mass of the resin, ε is the mass fraction of the resin transformed to the gas in respect to mass of composite, and ρ_2 is density of the composite. Therefore, $(\beta\chi_g - \varepsilon)$ represents the mass of decomposed resin in respect to mass of virgin material. This factor multiplied by ρ_2, defines density of decomposing resin. The maximum fraction of resin transformed to the gaseous state at given temperature is $\varepsilon_{max} = \beta\chi_g$. The reaction rate constant is given by Arrhenius form:

$$k = B_p e^{-\frac{E}{RT}} \tag{16}$$

From these, equations for calculation ε and m_p follow:

$$\frac{\partial\varepsilon}{\partial\tau} = k(\beta\chi_g - \varepsilon) = B_p(\beta\chi_g - \varepsilon)e^{-\frac{E}{RT}} \tag{17}$$

$$\varepsilon(x,\tau) \le \varepsilon_{max} = \beta\chi_g \tag{18}$$

$$m_p = \int_0^{\delta} \frac{\partial(\rho_2\varepsilon)}{\partial\tau} dx = \int_0^{\delta} \rho_2 B_p(\beta\chi_g - \varepsilon(x,\tau))e^{-\frac{E}{RT(x,\tau)}} dx\,. \tag{19}$$

For solving problems in this category, it is convenient to use double transformation of coordinates in the zones separately (Furzeland, 1980):

$$\psi = \frac{x - s}{\delta} \tag{20}$$

$$\psi = \frac{2\xi + (R-1)\xi^2}{R+1} \tag{21}$$

The obtained system of double transformed partial differential equations has been solved numerically using explicit finite difference scheme.

The equations for pyrolysis mass flow rate calculation, are not in transformed coordinates, so their numerical integration has been realized by inverse transformation of ξ to x. Euler's method has been applied for solving these equations. This method is satisfactory, because the time step is sufficiently small to achieve the necessary accuracy. Common forward or backward space finite differences have been applied to the boundary conditions.

EXPERIMENTALY

Two kinds of experiments have been carried out in order to estimate unknown thermal characteristics. The experiments have been conducted with a phenolic-composite samples exposed to intensive thermal load. The samples have been equipped with in-depth located thermocouples.

At the first experimental setup, for the simulation of the heat fluxes met under working conditions of ablative composites, an acetylene flame jet is used as a heat source, with axis of the hot stream normal to the sample ablating surface. The burner is mounted on a motorised stand that can be moved by remote control into and out of the position, as required. When working position is achieved, a micro switch signals the acquisition system that test has begun.

The design of the carbon fibre phenolic composite sample is shown in Fig. 2. The cylindrical sample 30 mm in diameter

and 19.18 mm thick has been fitted with a central plug 5.35 mm in diameter, equipped with thermocouples.

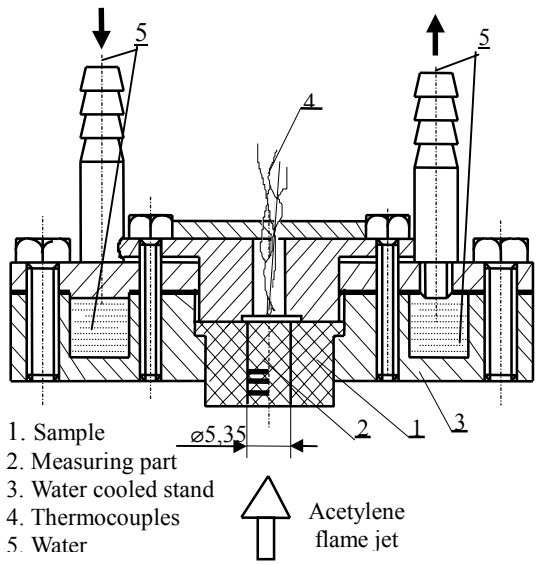

Figure 2. Scheme of the acetylene setup

Fast-response Chromel-Alumel thermocouples (0.1 mm in diameter) have been located close to each other, near the exposed surface. The whole sample assembly has been mounted on a water cooled stand. The heat flux applied to the sample surface has been measured by the same setup with copper sample equipped with thermocouple at the back side.

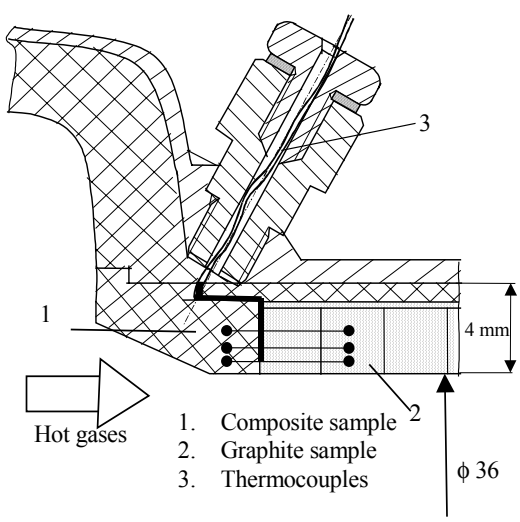

Figure 3. Scheme of the rocket nozzle setup

In the second experiment composite sample has been incorporated in rocket nozzle wall and, in working conditions, exposed to high velocity and high temperature stream along to the sample surface.

The design of the experimental section is presented in Fig 3. The annular 9.1 mm thick composite sample has been equipped with Chromel-Alumel thermocouples (0.1 mm in diameter) located close to each other, near the exposed surface. Beside this measuring part, the annular, 7 mm thick graphite part has been placed. The graphite sample with incorporated thermocouples has been used for heat flux determination.

Thickness of the samples and the distances of the thermocouple locations from the thermal loaded surface are presented in Table 1.

Table 1. Thermocouple locations from the free surface

Exp. No.	Sample Thickness [mm]	Thermocouples Location [mm]		
		No.1	No.2	No.3
1	19.18	1.22	4.44	9.79
2	9.1	1.1	1.66	3.22

On the basis of measured sample thickness before and after experiments, and experiment duration, the ablating velocities have been calculated. The average ablating velocities of $v_{a1} = 1.19 \cdot 10^{-4}$ m/s, and $v_{a2} = 2.57 \cdot 10^{-4}$ m/s have been obtained for the first and second experiment respectively.

The heat flux and the heat transfer coefficient for the first experiment have been determined as boundary inverse problem with copper sample of known thermal characteristics by using nonlinear estimation model presented here and analytical solution of ordinary heat transfer equation for copper sample. Obtained values of the heat transfer coefficient and gas temperature have been 3300 W/m^{2}K and 3370 K.

During the second experiment, two phases with different heat fluxes have been realized. The duration of the first phase has been 2 s and the duration of the second phase 3.4 s. The heat flux and heat transfer coefficient have been determined as boundary inverse problem with known thermal characteristics of graphite sample in the nozzle wall, and also with applying an integral model of the boundary layer (Kanevce, 1992). The obtained heat transfer coefficient and gas temperature have been 19695 W/m^{2}K and 3170 K for the first phase and, 6200 W/m^{2}K and 2910 K for the second phase.

The duration of the first and second experiment has been 30 s and 5.4 s respectively.

The both experimental systems provide accurate temperature data acquisition with sampling intervals in the range 50 ms.

NONLINEAR ESTIMATION

The nonlinear optimization problem is concerned with finding the minimum of the sum of squared differences between experimental and predicted temperatures:

$$E = (T - M(P))^T (T - M(P)) \tag{22}$$

where, the vector $P = [p_1, p_2, \ldots, p_n]^T$ represents the parameter values, the vector $M = [M_1, M_2, \ldots, M_m]$ contains the measured temperature values, the vector $T = [T_1, T_2, \ldots T_m]^T$ contains corresponding calculated values at the thermocouple locations, n is the total number of parameters and m is the total number of experimental temperature values i.e. the total number of calculated temperatures corresponding to the time and location of the measured temperature values.

To find the minimum of E (Eq. (22)), Marquardt's combination (Fletcher, 1971) of Newton-Raphson's and the steepest descent method has been used. The solution for P can be achieved using the iterative scheme

$$P^{(i+1)} = P^{(i)} + \Delta P^{(i)} \tag{23}$$

where i indicates iteration number and $\Delta P^{(i)}$ is solution of the set of linear equations:

$$[\gamma I + A^{T(i)} A^{(i)}] \Delta P^{(i)} = A^{T(i)} (T - M^{(i)}) \tag{24}$$

The A matrix represents the sensitivity coefficient matrix (Beck, Arnold, 1977) and it is defined as:

$$A = \begin{bmatrix} \frac{\partial T_1}{\partial p_1} & \frac{\partial T_1}{\partial p_2} & \cdots & \frac{\partial T_1}{\partial p_n} \\ \frac{\partial T_2}{\partial p_1} & \frac{\partial T_2}{\partial p_2} & \cdots & \frac{\partial T_2}{\partial p_n} \\ \vdots & & & \\ \frac{\partial T_m}{\partial p_1} & \frac{\partial T_m}{\partial p_2} & \cdots & \frac{\partial T_m}{\partial p_n} \end{bmatrix} \tag{25}$$

The adjustable parameter γ is chosen at every iteration so as to follow the Gauss-Newton method to as large an extent as possible, whilst retaining a bias towards the steepest descent direction to prevent divergence.

CALCUATIONS AND RESULTS

As it is mentioned before, responses of two carbon fibre phenolic samples from two different experiments are studied. The duration of the first experiment has been 30 s. The total number of 180 temperature readings has been taken in this experiment for the comparison with estimated temperature responses. The numerical calculation of temperature responses by using presented in-depth ablation model has been realized with 24 grid points. The duration of the second experiment has been 5.4 s. In this experiment 312 temperature readings have been taken. The numerical calculation has been realized with 80 grid points.

Model assumes thermophysical properties of the virgin material as known parameters. Different methods can be applied for thermal property estimation of composites (Dowding et al., 1995, Garnier et al., 1992). In this work, the room temperature values of thermal conductivity, $\lambda_2 = 0.76$ W/m/K, density, $\rho_2 = 1340$ kg/m^3 and the specific heat, $c_2 = 1249$ J/kg/K have been obtained by conventional methods (Maglic, Perovic, 1988).

The fraction of phenolic resin in the composite used is β=0.48. For $\chi_g(T)$, the following relation is valid (Kanevce, 1992):

$$\begin{aligned} \chi_g(T) &= -0.21322 \cdot 10^{-6} T^2 + 0.80560 \cdot 10^{-3} T \\ &- 0.12527, \qquad T < 1255,3K \\ \chi_g(T) &= 0.55, \qquad T \geq 1255,3K \end{aligned} \tag{26}$$

The nonlinear estimation of three and seven parameters has been analyzed.

Firstly, the estimation of the three most influential properties, thermal conductivity, λ_1, density, ρ_1 and specific heat, c_1, in the first zone has been conducted. The values of the other parameters have been taken from the references for the composites of the same kind. Good agreement between experimental and calculated temperature has been obtained.

The results of the estimation of the seven thermal parameters: thermal conductivity, λ_1, density, ρ_1 and specific heat, c_1, of the first zone, heat of ablation, H_c, heat of pyrolysis, ΔH_p and Arhenius constants, B_p, and E; figuring in the ablation model are presented in this paper. The values of estimated parameters are divided in three groups depending of their contribution to the agreement between experimental and calculated values.

Since the agreement between experimental and predicted temperatures mainly depend of the thermal conductivity, density and specific heat of the first zone, the estimated values of these parameters are shown firstly, in Table 2. In consideration of significantly different experimental conditions in the two represented experiments, reasonable match of the estimated property values is obtained.

Table 2. Estimated thermal properties of char layer

Exp. No.	λ_1 [W/m/K]	ρ_1 [kg/m3]	c_1 [J/kg/K]
1	2.957	1089	1105
2	2.407	1019	1978

Table 3. contains evaluated values for heat of ablation, and heat of pyrolysis obtained from acetylene and rocket nozzle experimental data.

Table 3. Estimated heat of ablation and pyrolyses

Exp. No.	Hc [J/kg]	ΔHp [J/kg]
1	$2.3 \cdot 10^7$	$4.8 \cdot 10^6$
2	$3.2 \cdot 10^6$	$7.5 \cdot 10^6$

Table 4. Estimated Arhenius constants

Exp. No.	E/R [K]	B_p [1/s]
1	$2.53 \cdot 10^4$	$5.6 \cdot 10^6$
2	$2.30 \cdot 10^4$	$9.9 \cdot 10^6$

The values of Arhenius constants are presented in Table 4.

The influence of parameters in Table 3. and Table 4. to the temperature responses is of lower degree so the agreement of presented parameter values for two experiments could be accepted as good.

Comparison of experimental and predicted temperature responses presented in Fig. 4. and Fig. 5.

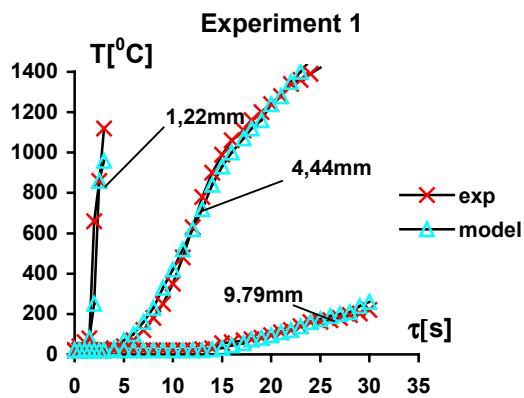

Figure 4. Experimental and predicted temperature responses for acetylene flame jet experiment

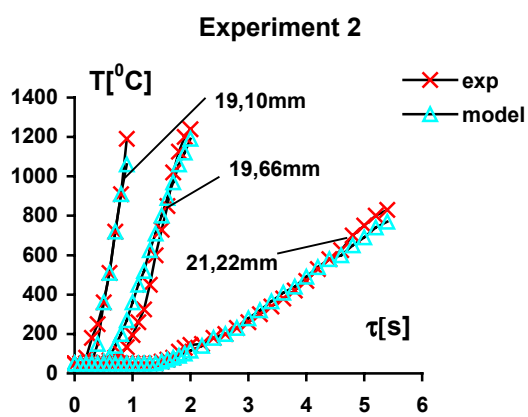

Figure 5. Experimental and predicted temperature responses for rocket nozzle experiment

In consideration of severe experimental conditions (very intensive thermal load, high temperature gradients in samples especially in the first zone, short experimental duration, fast complex chemical and physical changes in composite) a good agreement have been achieved in both experiments.

The obtained agreement confirms that the mathematical model is suitable for matching the thermocouple responses for the range of test conditions studied in this work.

CONCLUSIONS

The two kind of experiments with the same phenolic-composite, equipped with in-depth located thermocouples, exposed to high temperature and high velocity fluid stream, have been carried out and presented. In the first, the sample has been exposed to intensive thermal load from acetylene flame, and in the second, the sample has been incorporated in the rocket nozzle.

The obtained match between experimental and predicted temperatures in both experiment enables use of presented mathematical model of ablating composite for transient temperature prediction in ablating fibre phenolic composite.

The applied method of nonlinear estimation enabled rapid and sure convergence. However, to reduce influence of measurement noise to the results of calculations, the presented method, in next improvements, ought to include the regularization.

The coordinate transformations, and the applied explicit method enable solving proposed mathematical model with sufficient accuracy, using relatively small number of grid points, and consequently short computing time.

Obtained experimental data, calculated parameters and proposed mathematical model can be successfully used for transient temperature prediction in ablating fibre phenolic composite.

The main difference between conducted experiments is in applied thermal load. The greater thermal load has been accomplished in the second experiment. The applied high velocity and high temperature stream has been normal to the free sample surface at the first experiment and parallel with the free surface at the second experiment. The thickness of the examined samples has been different too.

Although conducted experiment have been different, estimated values of thermal properties in two experiments, especially that of great influence, show reasonable agreement. Therefore it can be concluded that the first experiment can be used for investigation of ablative composite behavior in real conditions. The second experiment ought to be applied for more precise analysis.

In further investigations the analysis of sensitivity coefficients and optimal experiment design (Taktak et al., 1993) ought to be included. In this stage sensitivity coefficients of three the most influenced parameters for thermal conductivity, specific heat and density have been analysed. It has been shown that these three sensitivity coefficients have been independent (Angelevski, 1998).

REFERENCES

Angelevski Z. Z., 1998, "Optimal Experiment for Thermophysical Properties of Composite Material Estimation," Ph. D. Thesis, University of Bitola, Bitola

Beck J. V. and Arnold K. J., 1977, *Parameter Estimation in Engineering and Science*, John Wiley&Sons., Inc., New York, NY

Carnahan B., Luther H., Wilkes J., 1969, *Applied Numerical Methods*, John Wiley & Sons, Inc. , New York

Dowding K., Beck J., and Ulbrich A., 1995, "Estimation of Thermal Properties and Surface Heat Flux in Carbon-Carbon Composite," *Journal of Thermophysics and Heat Transfer*, Vol. 9. No. 2, pp. 345-351

Fletcher R., 1971, "A Modified Marquardt Subroutine for Non-Linear Least Squares, " *AERE-R* 6799

Furzeland R. M., 1980, "A Compare Study of Numerical Methods for Moving Boundary Problems," *J. Inst. Maths. Applics*, 26, pp. 411-429

Garnier B., Delaunay D., and Beck J. V., 1992, "Estimation of Thermal Properties of Composite Materials Without Instrumentation Inside Samples," *International Journal of Thermophysics*, Vol. 13 No. 6, pp. 1097-1111

Kanevce P. Lj., 1992, "Determination of Thermophysical Properties of Ablative Materials in Real Conditions," Ph. D. Thesis, University of Belgrade, Belgrade

Maglic K., Perovic N., 1988, " Material Thermophysical Caracterization of Multi-Directional Composites," *VTI-Report*, Belgrade

Pfafl Robert C., Mitchel J. Barry, 1969., "A General Method for Simultaneous Measurement of Thermal Properties," *AIAA Paper*, No.69602, pp. 1-9

Taktak R., Beck J. V. and Scott E. P., 1993, "Optimal experimental design for Estimating Thermal Properties of Composite Materials," *Int. J. Heat and Mass Transfer* Vol. 36, No.12, pp. 2977-2986